DESSIN TECHNIQUE / TECHNICAL DRAWING

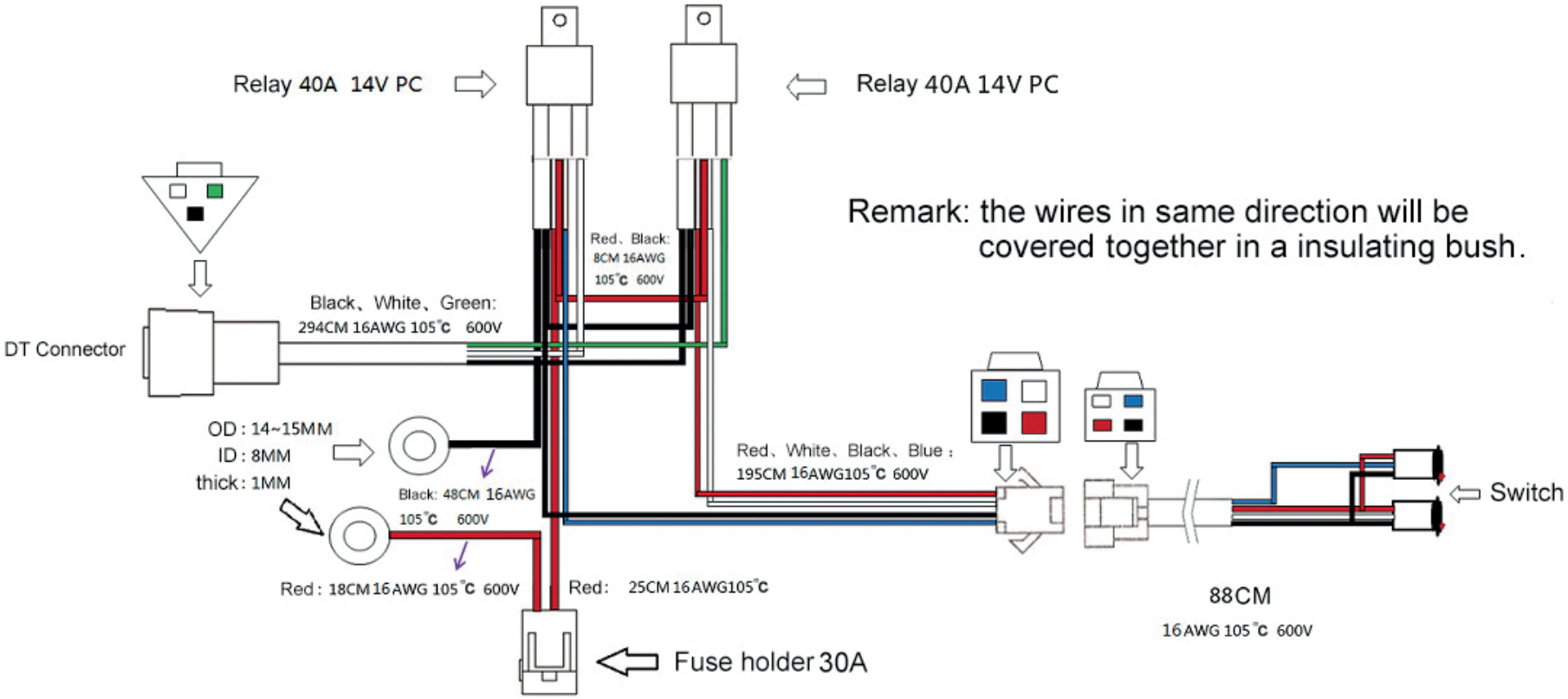

J-LITE OFF-ROAD
1 866 447-5656
INFO@JLITE-OFFROAD.COM
WWW.JLITE-OFFROAD.COM

709-959

Off-Road Wiring Harness 150W and more
Harnais de câblage Off-Road 150W et plus

2022-02-22

PROJECTIONS

SPECS 2 commutateur - 2 terminaisons - 3 connexion "PDT" / 2 switch - 2 ends - 3 "PDT" plug