# TECHNICAL DRAWING / DESSIN TECHNIQUE

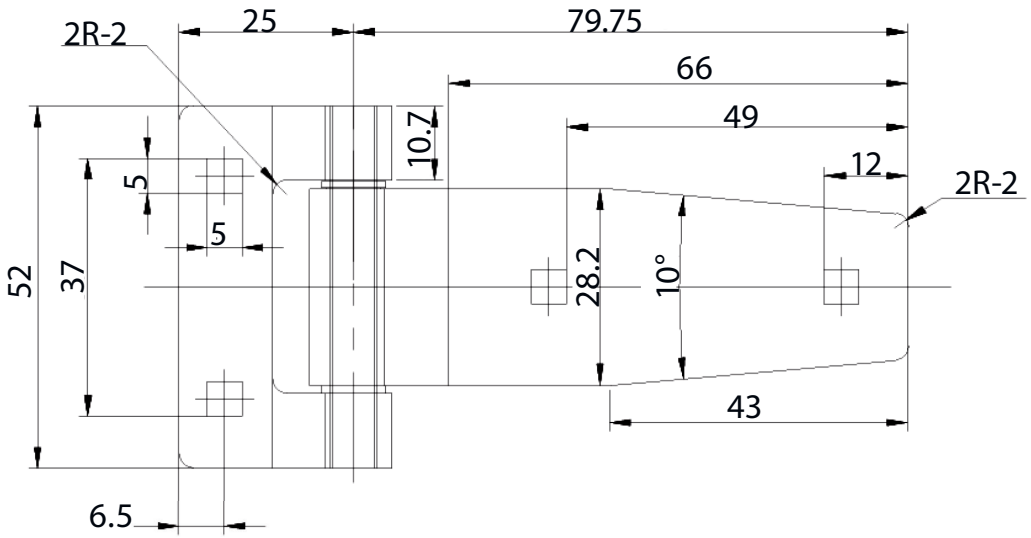


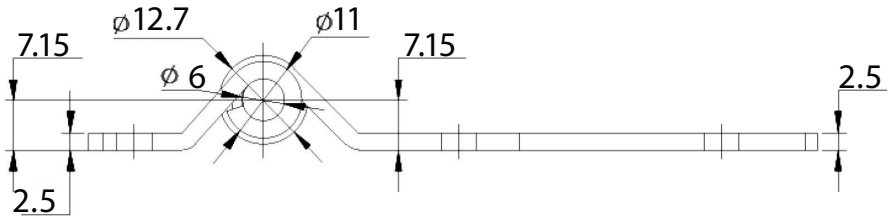



JIMEXS HARDWARE
1 866 447-5656 / INFO@JIMEXS.COM
WWW.JIMEXS-HARDWARE.COM


## 202-253

Hinge (round holes)
Penture (trous rounds)

2022-01-06

PROJECTIONS

DIMENSIONS 3,15"
MATERIAL / MATÉRIEL Stainless steel / Acier inoxydable